Product line	profiPLUS 50
Type:	Elbow coupling 50/48
Part-No.:	142.020.002

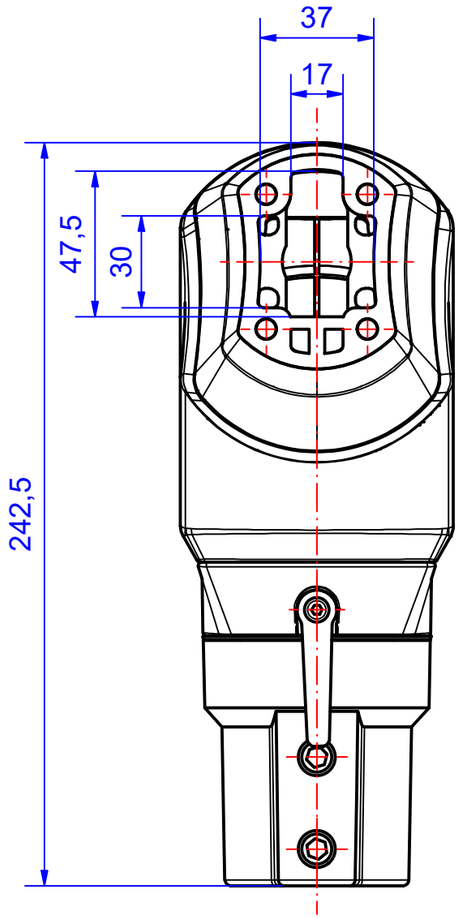

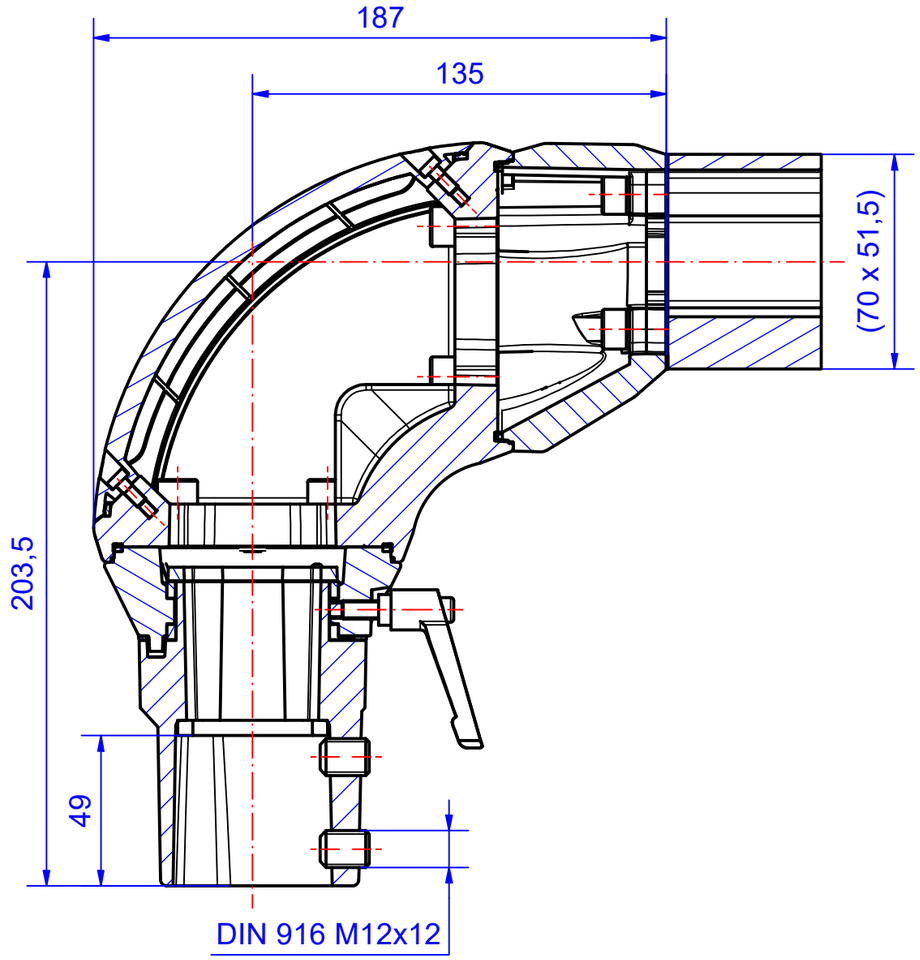

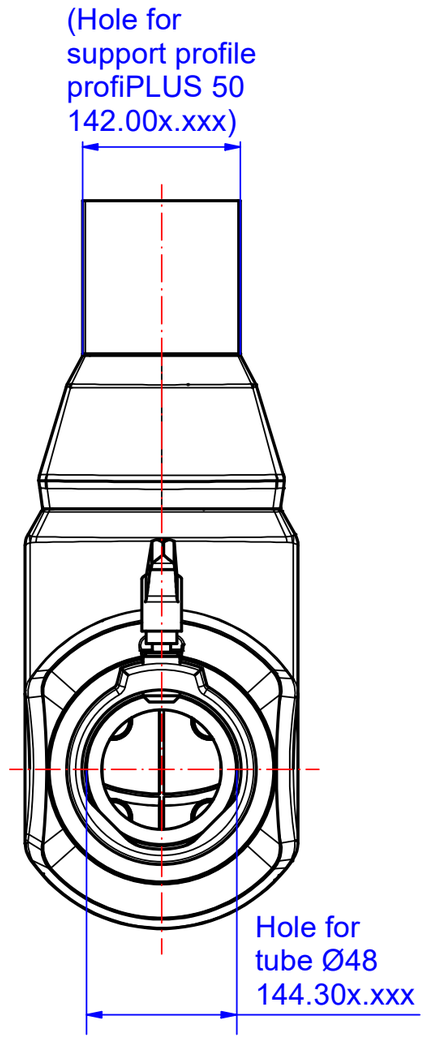

(the illustrated profile is not included in the scope of delivery)

Material system components	GD-Al Si 12		Pivoting range	300°
Gasket	5x Chloroprene (CR), 1x PUR (lid)		Weight (g)	2.150
Assembly screws	M8 (4x), M12 (2x)		Surface	Powder coating RAL 7035
Ingress protection	IP54 EN 60529			

technical changes subjected

02/26 - Ind.A